REGON 82130

FIRE EXTINGUISHER CABINET 9 kg

DAKEN
plastic in progress

External dimensions (mm): 715x335x240
Internal Dimensions (mm): 645x244x204
Weight (kg): 2.7
Ring Diameter (mm): 170/190

Quantity per pallet (n°):40
Pallets dimensions (cm): 122x71x265
Pallet Weight (kg): 130

TECHNICAL FEATURES

Material: polypropylene, nylon, polycarbonate
Production Process: Injection Molding
Label with company logo

COMPONENTS

- Label in PVC
- Inspection window in polycarbonate
- Nylon clamping ring with PVC spring

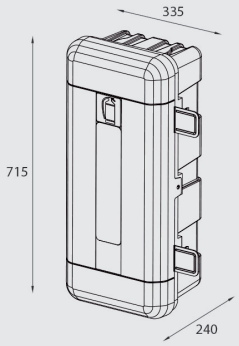

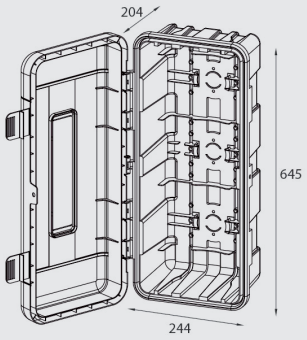

TEST AND CERTIFICATIONS

- **TÜV RHEINLAND** (7/2012) (IP certificated)

PRODUCT FEATURES

1. Double ergonomic handles integrated in the lid, with click-system anti-vibration for security in the everyday use
2. The Inspection window allows the view of the fire extinguisher. The "OR" seal guarantees a better water-resistance
3. Lockable against burglary or mishandling with a common padlock or with seal
4. Labyrinth system against water ingress. Even without seal is it guaranteed against dust and water ingress
5. Extinguisher holding kit composed of: PVC clamping spring with 4 holes, and Nylon clamping ring available in two sizes
6. Bayonet cap for clamping ring, with reinforced fixing points easy to assemble without any tools
7. PVC label (optional) 8x8 cm with extinguisher pictogram and/or company logo according to the law of the country of destination

OPTIONALS

Brackets: 88041, 88042
OPTIONS: Custom resin labels (pictogram and logo)

SPARE PARTS: 89515, 89507, 89506, 89508